BOND

HIGH PERFORMANCE 3D

Test Results

Bond High Performance 3D Technology

Version 1.8 | November 2020

victrex

MADE WITH
VICTREX PAEK

BOND
HIGH PERFORMANCE 3D

Executive summary

This document summarises the test results from specimens printed with Bond3D's technology.

- The strength, strain and impact strength of the test specimens are close to the reference values of stock shape material
- The strength of the additive manufactured components is near isotropic
- The level of voids, leak rate and outgassing rate are close to the detection limits of instruments that were used for the tests

Introduction

Bond3D additive manufacturing technology is designed to print various high performance polymers. This document only highlights results from specimens printed from pure Victrex 450G PEEK (data sheet of Victrex has been used for reference values). All test samples have been annealed, according to processing guide Victrex.

The values stated in this document are indicative and should not be interpreted as a guarantee of performance.

Mechanical properties

Bond3D samples are printed using parallel, non-overlapping print tracks. The directions are defined in relation to the print direction, to distinguish structural forces that are native to the printing process:

- the X-direction is defined as the direction of printing
- the Y-direction is used to define the bonding properties between parallel adjacent printed tracks
- the Z-direction is used to define the interlayer bond strength

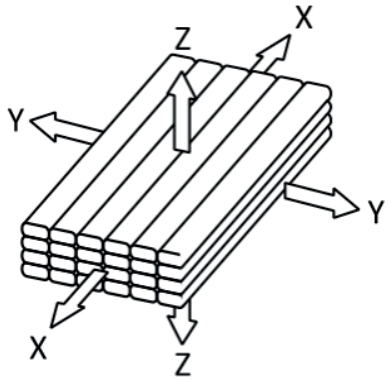

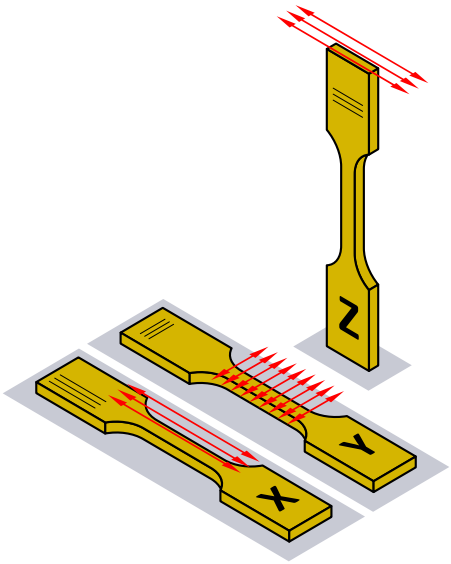

Tensile strength

In additive manufacturing, Z-strength is usually lower compared to strength in other directions. Therefore, extensive optimisations were carried out to improve Z-strength.

Test results are based on many test executed both in-house as externally. These external tests were done by investors and customers and showed similar values as internal testing.

Property	Value	Test standard
Tensile strength X	95 MPa	ISO 527
Tensile strength Y	95 MPa	ISO 527
Tensile strength Z	95 MPa	ISO 527

- Test samples have a geometry according to ISO 527-2 1BA.
- The speed of tensile test experiments was 1 mm/min.
- The test bars in X and Y direction were printed as bars directly on the build plate and machined afterwards.
- The test bars in Z-direction were printed as towers and machined afterwards.
- The reference strength of Victrex PEEK 450G is 98 MPa at yield.

Strain at break

Property	Value	Test standard
Strain at break X	20%	ISO 527
Strain at break Y	5%	ISO 527
Strain at break Z	5%	ISO 527

The reference ultimate tensile strain of Victrex PEEK 450G is 45%.

Flexural strength

Property	Value	Test standard
Flexural strength X-direction, at yield	160 MPa	ISO 178
Flexural strength Y-direction, at yield	160 MPa	ISO 178
Flexural strength Z-direction, at yield	160 MPa	ISO 178

The typical value of the flexural strength at yield of Victrex 450G at 23°C is 165 MPa.

BOND
HIGH PERFORMANCE 3D

Tensile & flexural modulus

Property	Value	Test standard
Tensile modulus X,Y,Z-direction	Typical 4 GPa	ISO 527
Flexural modulus X,Y,Z-direction	Typical 4 GPa	ISO 178

Izod notched impact strength

Property	Value	Test standard
Impact energy absorbed X-direction	5.4 kJ/m^2	ISO 180
Impact energy absorbed Y-direction	5.1 kJ/m^2	ISO 180
Impact energy absorbed Z-direction	2.5 kJ/m^2	ISO 180

The test bars in X and Y direction were printed directly on the build plate without further post-processing. The tests were carried out with a kinetic test energy of 1 Joule.
The typical value for the Izod notched impact strength for Victrex PEEK 450G is 8 kJ/m^2.

Compressive strength

Property	Value	Test standard
Compressive strength XY-direction	140 MPa	ISO 604
Compressive strength Z-direction	140 MPa	ISO 604

The typical value for compressive strength of Victrex PEEK 450G is 125 MPa at 23°C.

Surface Roughness

The surface roughness tests were carried out at room temperature according to ISO 4287.

Typical configuration		Roughness Ra Perpendicular to print lines (µm)			
Nozzle size (mm)	Layer height (mm)	Top	Bottom	Side vertical	Side sloped
0.6	0.2	6.0	3.3	12.7	27.5
0.6	0.15	5.5	2.6	9.3	20.9
0.3	0.2	12.2	1.5	11.5	19.7
0.3	0.15	9.4	1.6	8.3	12.4

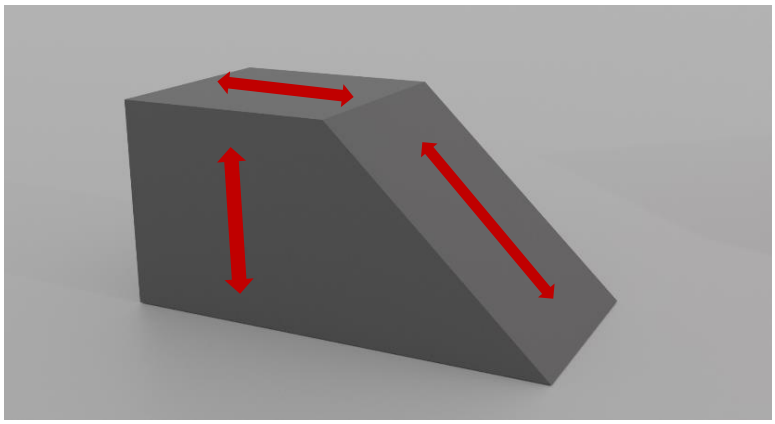

Remark: Parallel to the print lines the roughness is 1 – 4 µm.

Insert strength

The strength of heat transfer inserts of size M3 (SonicLok 860) inserted into 3D printed PEEK samples was tested by performing pull tests. The tests have been performed on printed samples of both build directions (parallel and perpendicular to the insert install direction).

A maximum pull force load of 1300 N is recommended.

Property	Value	Remark
Pull force, insert direction parallel tot print direction	1350 N	Average value
Pull force, insert direction perpendicular to print direction	1500 N	Average value

Leak tightness

A pressure decay test showed a leak rate of $8 \cdot 10^{-6}$ mbar·l/s. The pressure decay test is a leak test method used to determine the total leakage of a product by measuring the pressure change during a specified time interval at a specified leak test pressure. The test was executed at 7.5 bar(g) for 1 hour with 10 test samples.

The test is performed on the XYZ tube of the Manifold Demonstrator of Bond3D, which is highlighted in blue. This pipe represents all printing directions, such that airtightness is tested independent on the printing direction.

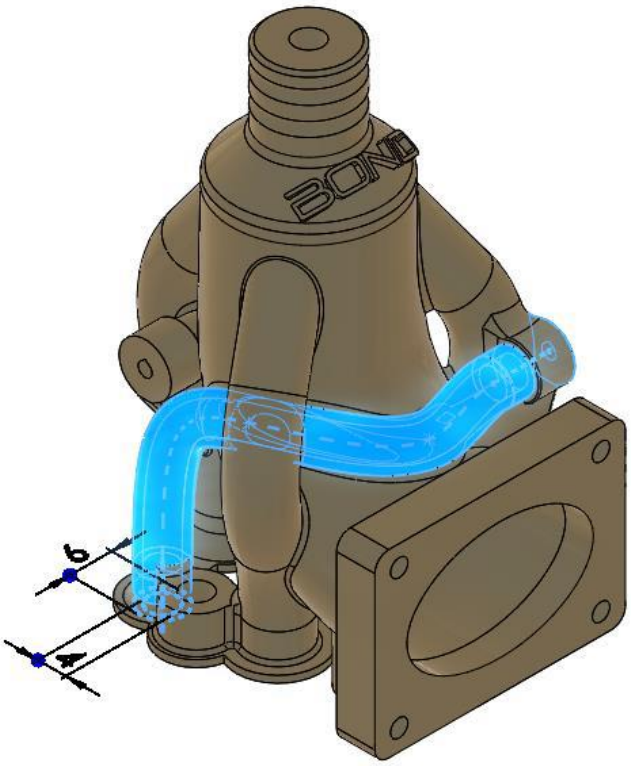

Outgassing - TOC

3D printed parts conditioned at 150°C during 4 hours were tested for outgassing at 100°C using thermal desorption – gas chromatography – mass spectrometry (TD-GC-MS).
The outgassing rate of the sample at 100°C was very low, being close to the limit of detection.
Due to the low intensity, few compounds could be identified. Major compound identified at 100°C is nonanal. The TOCv and refractories are very close to the blank values.

BOND
HIGH PERFORMANCE 3D

About Bond3D

Bond High Performance 3D technologies BV, operating out of Enschede, the Netherlands, and founded in 2014, is driving innovation in the field of 3D printing. Bond's patented technology is unique in its ability to produce functional parts from high-performance polymers; polymers that are certified for use in critical applications.

A highly skilled team of international professionals develops a novel printing technology including system mechatronics, software, slicing technology and process validation. The combination of high performing polymers and the developed technology targets strategic markets such as medical, aerospace, energy, automotive, manufacturing and engineering applications.

Bond3D empowers and inspires these markets to push boundaries for novel applications using the shaping capabilities of 3D printing. For more information please visit bond3d.com

BOND
HIGH PERFORMANCE 3D

Contact

For further information please contact:
Remco de Jong or Marc Kunst
sales@bond3d.com

Bond High Performance 3D Technology
Institutenweg 50
7521 PK Enschede
Bond3d.com
info@bond3d.com

victrex
MADE WITH
VICTREX PAEK

BOND

HIGH PERFORMANCE 3D